MHI Patented NoAge™ Enhanced Silicon Carbide Heating Elements & Accessories

Save Time and Money with MHI's Enhanced Silicon Carbide

"We've tried other manufacturers but yours worked better... Definitely longer life and more stable."
JM—USA

MHI DM-Type Silicon Carbide Heating Elements

750 Redna Terrace, Cincinnati, Ohio 45215
TEL 513-772-0404 FAX 513-672-3333
E-MAIL sales@mhi-inc.com WEB www.mhi-inc.com

MHI
Micropyretics Heaters International

Micropyretics Heaters International

Your Single Integrated Manufacturing Source™

MHI has been in business for over 20 years with a stellar performance that encompasses at its core, the tradition of rapid invention and innovation/manufacturing for energy efficiency and environmental impact. MHI headquarters are located in Cincinnati, OH USA. Today the company exports products to over 25 countries world-wide and is one of the few Ohio companies with such an experienced innovation profile. MHI factories are located in Cincinnati and other cities. MHI has close to a thousand customers with good testimonials from all over the world particularly for service and after sales interactions. MHI was founded in late 1991, and soon after, started R&D operations with one employee in a business incubator. Repeat and growing sales ensued around 1994-1995, first of MoSi2 heating elements followed by furnaces and devices that used these heating elements, and other accessories and electronics that were developed exclusively for these products. Over the years, MHI has grown vertically, making its own unique electronics, refractories, materials, controls, software systems, designs and components since 1996. It currently has an extremely versatile, modular platform of technologies and products from which new products and innovations are launched like the nanostructured heaters, one atmosphere superheated steam and Cascade e-Ion Plasma.

MHI Awards https://mhi-inc.com/mhi-awards	
• Governor's Award - Excellence in Energy Efficiency 1996	• Entrepreneurial Excellence 2002,2003
• R & D Award Best 100 Products 1999, 2001, 2004, and 2005	• Ohio's Thomas Edison Program – Energy Technology Award 1999 • Fast 50 Award 2014
• Hamilton County Development Company – Business Development Award 2003	• Cincy Business Manny Award 2007 • Best of Cinti 2019
• 2005 Corporate Environment Achievement Award of the American Ceramic Society	• DOE American Invention 2020 • Todd Portune Climate Savings Award 2022/2023

Micropyretics Heaters International

WWW.MHI-INC.COM • 750 REDNA TERRACE CINCINNATI, OH 45215 • PHONE: 513.772.0404 • FAX: 513.672.3333 • SALES@MHI-INC.COM

Micropyretics Heaters International

Innovative Technology and Manufacturing Source™

MHI's NoAge™ Enhanced Silicon Carbide Heating Elements

Save Time and Money with MHI'S Enhanced Silicon Carbide

The MHI Silicon Carbide heating element is a time trusted heating element only surpassed in temperature by MHI Molybdenum Disilicide heating elements.

Effect of MHI NoAge™ Enhancement on the Stability of Silicon Carbide Elements Element Temperature: 1550°C (Free Radiating Mode)

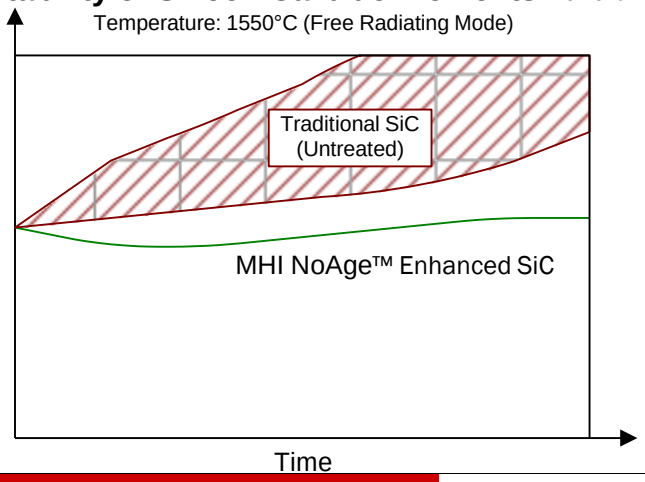

In the chart on the left note that traditional silicon carbide elements can show great variation in properties and rapidly deteriorate while increasing the power demand at the set point temperature. MHI NoAge™ Silicon Carbide heating elements offer high stability at elevated temperatures.

MHI NoAge™ Silicon Carbide treatment advantages*:

1. Save energy to maintain equivalent temperature.
2. Feature significant life enhancement.
3. Offer better power stability at high temperature.

MHI's Silicon Carbide is characterized by high use temperature, high oxidation resistance, low corrosion, long service life, low creep, and easy installation features. MHI Silicon Carbide heating elements are available in eight basic configurations and all are conditioned with the MHI patented and patent applied NoAge™ treatment. MHI's NoAge™ enhancement increases element life, reduces furnace down time, and promotes increased productivity and profitability. Try MHI's NoAge™ Enhanced Silicon Carbide elements and see the difference.

"...We purchased two heating elements...I can almost guarantee we will be return customers. Thanks."
CS—USA

⌘

"The best Silicon Carbide Elements we have ever used, life is much higher!"
RM—USA

⌘

"I am writing to ask you to extend our thanks to all the people on your staff that were involved in getting our order put together and shipped in such a timely manner..." BL—USA

Here's why your company should use MHI Silicon Carbide heating elements:

- ✓ LONG LIFE
- ✓ HIGH EMISSIVITY (POWER DELIVERY)
- ✓ HIGH OXIDATION RESISTANCE
- ✓ LOW CORROSION & LOW CREEP (SEE CURVE ABOVE)
- ✓ EASY INSTALLATION FEATURES
- ✓ REDUCED MAINTAINENCE DOWN TIME = INCREASED PRODUCTIVITY
- ✓ WE ARE A TRUSTED, AWARD-WINNING ELEMENT MANUFACTURER

For more information or to receive a formal quote, please visit our web site at www.mhi-inc.com and fill out an Information Request Form, call 513-772-0404 and ask for our Sales Department, or e-mail us at sales@mhi-inc.com.

MHI NoAge™ Silicon Carbide Material Properties (nominal values only):
specific heat = 0.07-0.14 kJ/kg·K | specific gravity = 3.0-3.1 g/cm³

**NOTE: Please contact MHI for details. Comparison is made between treated and untreated MHI SiC and do not reflect a comparison with other manufacturers.*

For temperatures up to 1900°C see our MHI MoSi² Heating Element Handbook.

Micropyretics Heaters International

WWW.MHI-INC.COM • 750 REDNA TERRACE CINCINNATI, OH 45215 • PHONE: 513.772.0404 • FAX: 513.672.3333 • SALES@MHI-INC.COM

Designing With MHI Silicon Carbide

Surface Loading

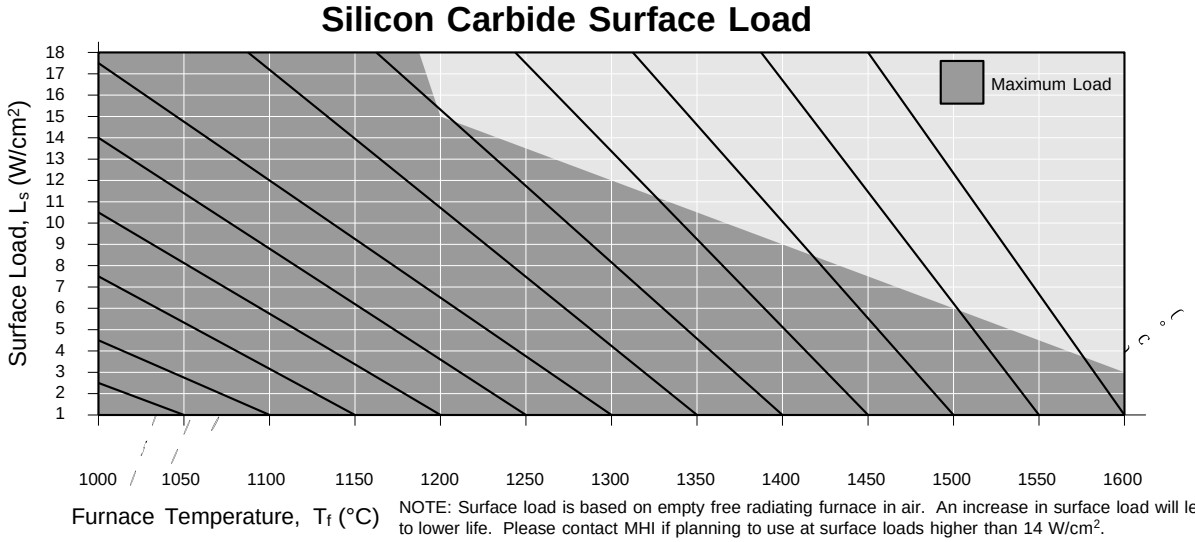

NOTE: Surface load is based on empty free radiating furnace in air. An increase in surface load will lead to lower life. Please contact MHI if planning to use at surface loads higher than 14 W/cm^2.

The recommended surface load for MHI NoAge silicon carbide is between 10-15 W/cm^2. A lower surface load may also be used (minimum 4 W/cm^2). To use the chart above you should know your desired furnace temperature (T_f) and either the furnace power (P) or surface load (L_s). Using this information you can find an optimal element running temperature that will satisfy the surface load and furnace temperature requirements. Please call MHI if you are designing a furnace as the total power needed will vary with furnace size and insulation.

Relevent Formulas: Total Element Surface Area (A_e) = π x D x L x N (D = element diameter, L = hot zone length, N = number of elements)

Element Spacing

Elements should be spaced according to the diagram below.

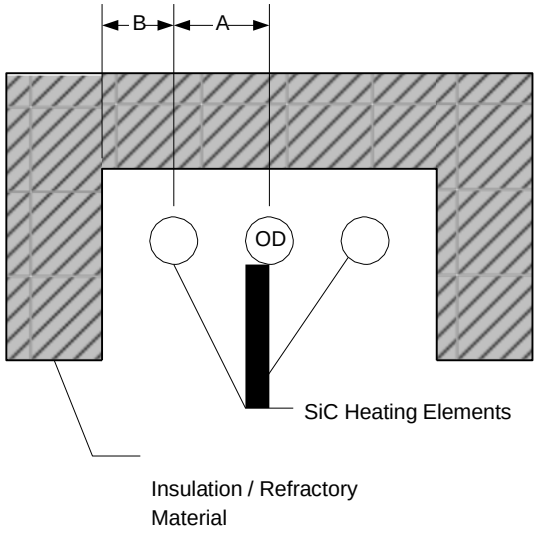

NOTES:

A = (D x 2) – Minimum space between elements.
B = (D x 1.5) – Minimum space between element and insulation / refractory material.
OD = Outside diameter of heating element.

Electrical Specifications

Silicon carbide heating elements can be considered simple resistive loads. Normal electrical laws apply and elements can be connected in series, parallel, or a combination. Parallel connection is preferred as variance in resistance will have a reduced effect on the electrical circuit. *If you need electrical specifications for your heating elements please ask your MHI sales representative during the quote process.*

Control Options

MHI offers a wide array of control solutions. MHI control panels (BPAN, HIPAN, etc.) are equipped with phase angle fired SCR's and offer a closed-loop setpoint control system. This offers the ability to set a target temperature and requires minimal monitoring.

Some users may use variable output transformers. They are an open-loop style control where the voltage is controllable, but requires constant monitoring of element resistance. These controls do not offer setpoint feedback control and are usually manually operated.

Please contact your MHI sales representative for more information on MHI control solutions for silicon carbide heating elements.

MHI NoAge™ Silicon Carbide Heating Elements

Type RX1

Type RX1 has the cold ends impregnated with silicon metal to reduce their resistance and can operate efficiently up to 1500°C (2732°F). This element may be mounted either vertically or horizontally. MHI's RX element is a high density, self bonding silicon carbide solid rod element. It is available in a wide range of diameters and length. This type of element is available in RX2 and RX3.

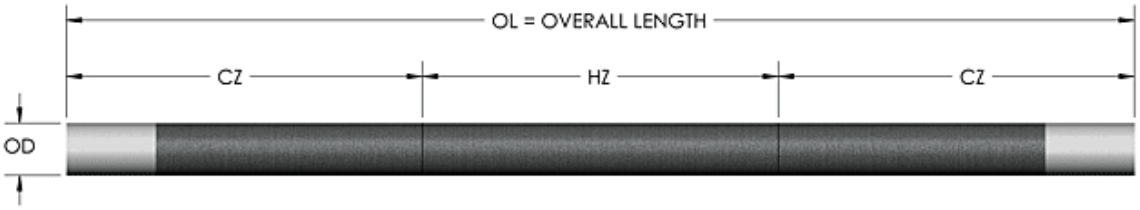

Type RX2

Type RX2 is a 2 piece element featuring welded-on cold ends which run cooler than those with one-piece cold ends. The resistance of both legs is equal to ensure a uniform performance. Both shanks are joined with a crossbar made of low resistance and have a maximum temperature rating of 1600°C (2912°F). MHI's RX element is a high density, self bonding silicon carbide solid rod element.

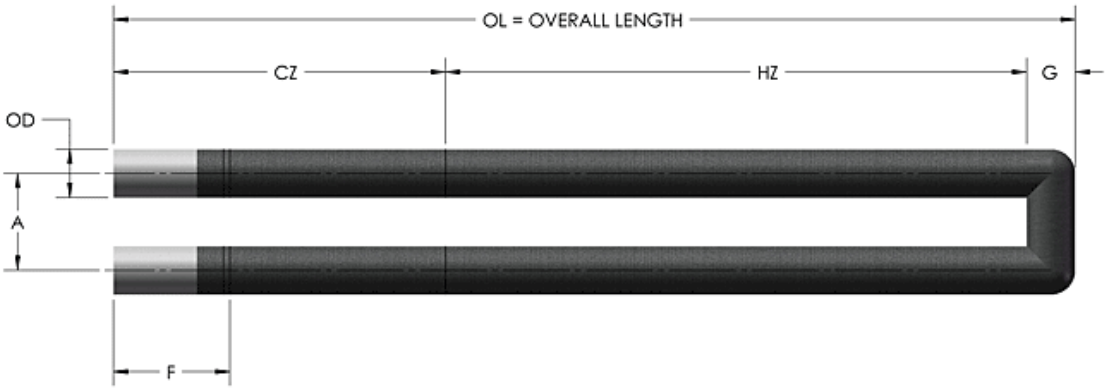

Micropyretics Heaters International

WWW.MHI-INC.COM • 750 REDNA TERRACE CINCINNATI, OH 45215 • PHONE: 513.772.0404 • FAX: 513.672.3333 • SALES@MHI-INC.COM

MHI NoAge™ Silicon Carbide Heating Elements

Type RX3

Type RX3 is a 3 piece element featuring welded-on cold ends which run cooler than those with one-piece cold ends. They have a maximum temperature rating of 1600°C (2912°F). MHI's RX element is a high density, self bonding silicon carbide solid rod element. They are designed for vertical installation and can be connected directly on a three-phase power supply.

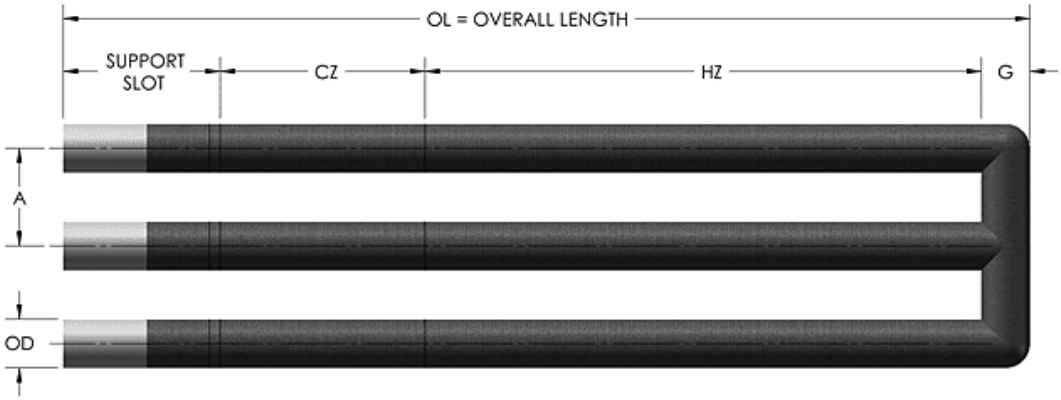

Dumbbell

Dumbbell consists of a hot zone with high electrical resistivity and two thickened cold ends of low resistance due to their larger diameter. Hot zones and cold ends are made of exceptionally homogeneous, self-bonded silicon carbide. These elements are self supporting and can be installed vertically or horizontally.

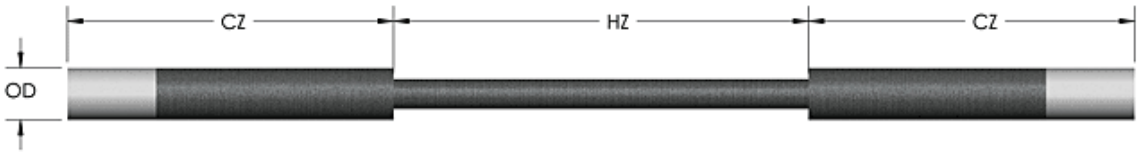

Micropyretics Heaters International

WWW.MHI-INC.COM • 750 REDNA TERRACE CINCINNATI, OH 45215 • PHONE: 513.772.0404 • FAX: 513.672.3333 • SALES@MHI-INC.COM

MHI NoAge™ Silicon Carbide Heating Elements

Type X

Type X is made of a tube, with a single helical heating section and low resistance electrical terminals at each end. Both ends of the elements are metalized with aluminum to provide low resistance contacts.

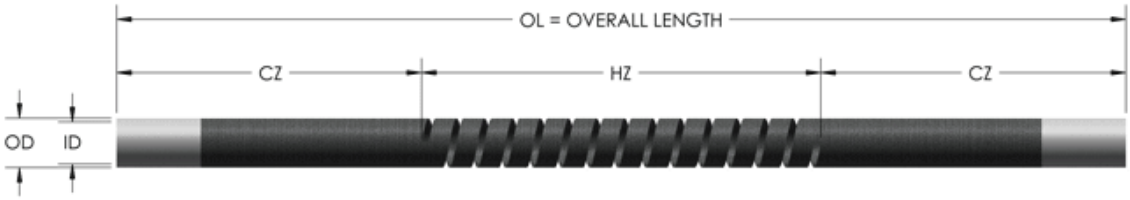

Type DM

Type DM is used in similar applications to Type MF, but has both terminals at one end, allowing free access to the other end. Elements totally surround the work or work tube allowing simple and compact furnaces to be constructed. The conditions applying to work tube selection are generally the same as MF Type elements and the maximum sizes.

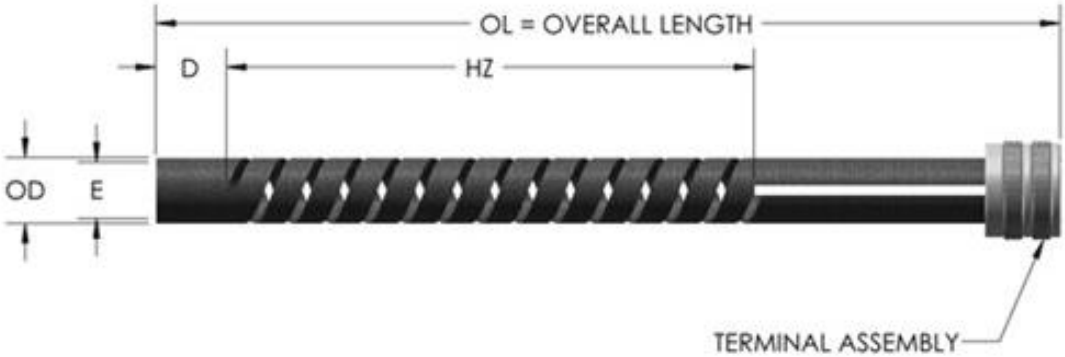

Micropyretics Heaters International

WWW.MHI-INC.COM • 750 REDNA TERRACE CINCINNATI, OH 45215 • PHONE: 513.772.0404 • FAX: 513.672.3333 • SALES@MHI-INC.COM

MHI NoAge™ Silicon Carbide Heating Elements

Type DS

Type DS are high operating temperature heating elements that operate efficiently from 200°C to 1600°C. They have high resistance to thermal shock and therefore, ensure long service life, even with intermittent use. This enables easy replacement of elements without resorting to complete furnace shutdown (terminal ends may be different).

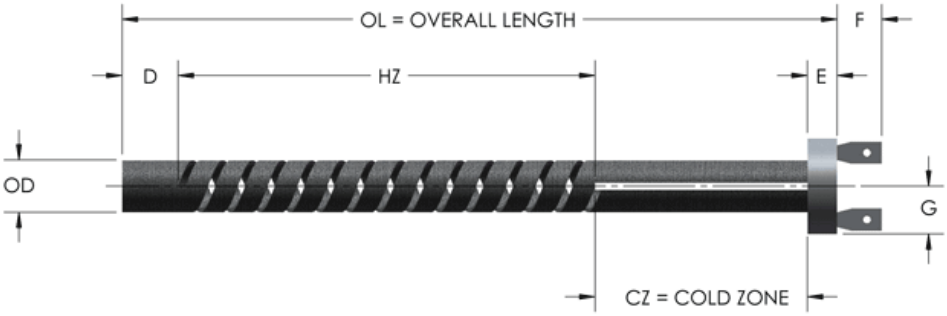

Type MF

Type MF allows the full benefits of the high working temperature of silicon carbide to be achieved in small, efficient furnaces by completely surrounding the work or work tube with the element. As the wire is heated from all sides, a high degree of temperature uniformity can be achieved, making the MF element ideal for applications such as thermocouple calibration rigs, differential thermal analysis equipment, creep testing, etc.

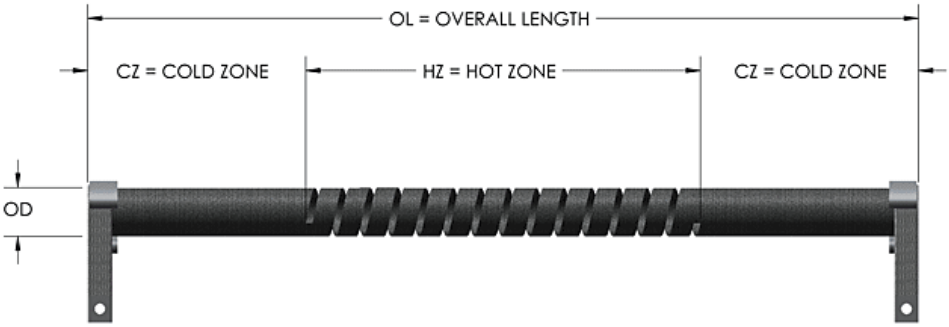

Micropyretics Heaters International

WWW.MHI-INC.COM • 750 REDNA TERRACE CINCINNATI, OH 45215 • PHONE: 513.772.0404 • FAX: 513.672.3333 • SALES@MHI-INC.COM